PINNACLE ARCHITECTURAL LIGHTING®

Project Name _____

Date _____ Type _____

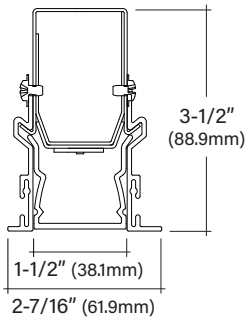

EDGE FORMS

EV1DF

1" Recessed Direct Form

Form Sizes

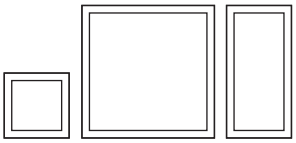

S2-2x2 S4-4x4 R24-2x4

Key Features

- Illuminated recessed outlines blend seamlessly into the ceiling, highlighting negative space
- Single piece housing, available in 2x2, 2x4, and 4x4 forms
- Co-extruded narrow 1.5" lens provides smooth uniform lines of light
- Integral driver
- Family offering available in recessed and suspended applications
- Product transparency with third-party verified Living Building Challenge (LBC) Declared

Example Part #: EV1DF-HE-835HO-S2-G1-U-FSD-1-0-W

EV1DF - ____ - ____ - ____ - ____ - ____ - ____ - ____ - ____ - ____ - ____

SHIELDING | *CRI, CCT & OUTPUT* | *FORM* | *MOUNTING* | *VOLTAGE* | *DRIVER* | *CIRCUITING* | *BATTERY & EMERGENCY* | *FINISH* | *FIXTURE OPTIONS*

__	_____	___	__
SHIELDING	**SOURCE[1]**	**FORM**	**MOUNTING[2]**
A - Satine Lens **HE** - High Efficiency Lens *Shielding pg. 2*	**_27__ -** 2700K **_30__ -** 3000K **_35__ -** 3500K **_40__ -** 4000K **LO -** 250 lms/ft **MO -** 500 lms/ft **HO -** 750 lms/ft **VHO -** 1000 lms/ft **CL_____ -** Custom Lumens **CW_____ -** Custom Watts *Lumen Output pg. 2*	**S2 -** 2' x 2' Square **S4 -** 4' x 4' Square **R24 -** 2' x 4' Rectangle *Form pg. 3*	**G1 -** 1" *(15/16")* T Bar **G9 -** 9/16" T Bar **GS -** Screw Slot T Bar **SF -** Spackle Flange *Mounting pg. 3*

_	___	_	____
VOLTAGE	**DRIVER**	**CIRCUITING**	**BATTERY & EMERGENCY[3]**
U - Universal *(120 thru 277V)* **1 -** 120V **2 -** 277V **3 -** 347V *Voltage pg. 3*	**FSD -** Factory Select Driver *(1%, 0-10v)* **PL2 -** Advance Xitanium *(1%, 0-10v)* **OL2 -** eldoLED *(1%, 0-10v)* **OL4 -** eldoLED 347v *(1%, 0-10v)* **EE1 -** eldoLED ECOdrive *(1%, 0-10v)* **ES1 -** eldoLED SOLOdrive *(0.1%, 0-10v)* **LH1-** Lutron Hi-lume *(1%, EcoSystem)* *Driver pg. 4*	**1 -** Single Circuit **E -** Emergency *(entire fixture)* **N -** Night Light *(entire fixture)* *Circuiting pg. 4*	**0 -** None **1FSB** - Factory Select Battery **1FSG -** Factory Select ALCR **1GI -** Iota ETS DR **1GB -** Bodine GTD **1PLL -** Bodine 10W **1ILL -** Iota 10W *Battery and Emergency pg. 4*

__	___	
FINISH	**FIXTURE OPTIONS[4]**	**CONTROLS**
W - White **S -** Metallic Silver **BL -** Textured Black **BR -** Bronze **GR -** Graphite **CC -** Custom Color *Finish pg. 5*	**CP -** Chicago Plenum **FW6** - 6' Flex Whip **BA -** Buy America(n) Act and/or Build America Buy America Compliant *Fixture Options pg. 5*	*Pinnacle is able to accommodate different control solutions from different manufacturers. Consult factory for more information.*

[1]When specifying CRI, CCT & OUTPUT the first _ is for specifying either **8** - 80CRI or **9** - 90CRI. The ending __ are for specifying output, example **HO** - High Output. See output charts for more information. [2]Grid mounting types include a T-Bar compatible rail on the outer perimeter of the Form and a flanged rail on the inner perimeter to support cut ceiling tiles. Consult factory for matching outside/inside mounting rails. [3]Maximum one battery/emergency device per form. Not available in S2. [4]Compliance is configuration dependent; consult factory for confirmation.

Specifications and dimensions subject to change without notice. Specification sheets that appear on pinnacle-ltg.com are the most recent version and supersede all other previously printed or electronic versions.

Shielding

A	HE
Satine Lens	High Efficiency Lens ~20-25% Higher LPW than Satine

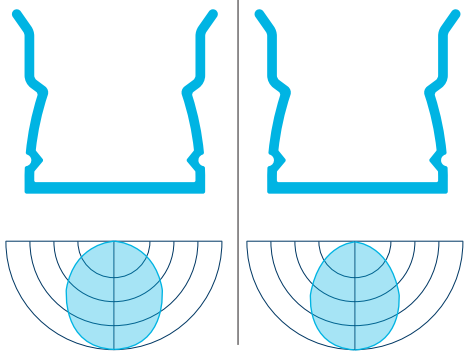

CRI, CCT & Output

- Specify either 80 or 90 CRI
- Longer lead-time may apply for 90 CRI. Consult factory
- 90 CRI = R9≥50
- Total delivered lumens per form shown on table below.
  Lumens per foot; LO - 250lms/ft, MO - 500lms/ft, HO - 750lms/ft and VHO - 1000lms/ft

Custom Output - Lumens OR Wattage

CL_ _ _ _ _	Specify CRI, CCT and desired lumens (i.e. CL835600)	*Specify lumens as PER FOOT between standard offering listed below. Lumens are specified per color temp.*
CW_ _ _ _ _	Specify CRI, CCT and desired wattage (i.e. CW9407)	*Specify wattage as PER FOOT between standard offering listed below. Lumens are specified per color temp.*

Forms Direct 80 CRI

	Color	Output																	
		S2 - 2x2 Square						**S4 - 4x4 Square**						**R24 - 2x4 Rectangle**					
		A Lens			HE Lens			A Lens			HE Lens			A Lens			HE Lens		
		Lumens	*LPW*	*Watts*	*Lumens*	*LPW*	*Watts*	*Lumens*	*LPW*	*Watts*	*Lumens*	*LPW*	*Watts*	*Lumens*	*LPW*	*Watts*	*Lumens*	*LPW*	*Watts*
830LO	3000K	2000	83	24.1	2000	104	19.2	4000	83	48.3	4000	104	38.5	3000	83	36.2	3000	104	28.9
830MO		4000	92	43.5	4000	114	35.2	8000	92	87.0	8000	114	70.4	6000	92	65.2	6000	114	52.8
830HO		6000	93	64.3	6000	113	53.0	12000	93	128.6	12000	113	106.1	9000	93	96.5	9000	113	79.6
830VHO		N/A			8000	117	68.6	N/A			16000	117	137.2	N/A			12000	117	102.9
835LO	3500K	2000	86	23.4	2000	107	18.7	4000	86	46.8	4000	107	37.3	3000	86	35.1	3000	107	28.0
835MO		4000	95	42.1	4000	117	34.1	8000	95	84.2	8000	117	68.3	6000	95	63.2	6000	117	51.2
835HO		6000	96	62.3	6000	117	51.4	12000	96	124.5	12000	117	102.7	9000	96	93.4	9000	117	77.0
835VHO		N/A			8000	120	66.8	N/A			16000	120	133.7	N/A			12000	120	100.3
840LO	4000K	2000	86	23.4	2000	107	18.7	4000	86	46.8	4000	107	37.3	3000	86	35.1	3000	107	28.0
840MO		4000	95	42.1	4000	117	34.1	8000	95	84.2	8000	117	68.3	6000	95	63.2	6000	117	51.2
840HO		6000	96	62.3	6000	117	51.4	12000	96	124.5	12000	117	102.7	9000	96	93.4	9000	117	77.0
840VHO		N/A			8000	120	66.8	N/A			16000	120	133.7	N/A			12000	120	100.3

Forms Direct 90 CRI

927LO	2700K	2000	73	27.6	2000	85	23.6	4000	73	55.2	4000	85	47.2	3000	73	41.4	3000	85	35.4
927MO		4000	74	54.0	4000	94	42.5	8000	74	108.0	8000	94	85.1	6000	74	81.0	6000	94	63.8
927HO		N/A			6000	95	62.9	N/A			12000	95	125.8	N/A			9000	95	94.3
927VHO		N/A			N/A			N/A			N/A			N/A			N/A		
930LO	3000K	2000	79	25.3	2000	92	21.7	4000	79	50.6	4000	92	43.4	3000	79	38.0	3000	92	32.5
930MO		4000	81	49.4	4000	103	39.0	8000	81	98.8	8000	103	78.0	6000	81	74.1	6000	103	58.5
930HO		6000	83	72.5	6000	102	58.6	12000	83	145.0	12000	102	117.2	9000	83	108.7	9000	102	87.9
930VHO		N/A			N/A			N/A			N/A			N/A			N/A		
935LO	3500K	2000	79	25.4	2000	92	21.8	4000	79	50.8	4000	92	43.5	3000	79	38.1	3000	92	32.7
935MO		4000	81	49.6	4000	102	39.1	8000	81	99.3	8000	102	78.3	6000	81	74.4	6000	102	58.7
935HO		6000	82	72.8	6000	102	58.8	12000	82	145.6	12000	102	117.6	9000	82	109.2	9000	102	88.2
935VHO		N/A			N/A			N/A			N/A			N/A			N/A		
940LO	4000K	2000	79	25.4	2000	92	21.8	4000	79	50.8	4000	92	43.5	3000	79	38.1	3000	92	32.7
940MO		4000	81	49.6	4000	102	39.1	8000	81	99.3	8000	102	78.3	6000	81	74.4	6000	102	58.7
940HO		6000	82	72.8	6000	102	58.8	12000	82	145.6	12000	102	117.6	9000	82	109.2	9000	102	88.2
940VHO		N/A			N/A			N/A			N/A			N/A			N/A		

Specifications and dimensions subject to change without notice. Specification sheets that appear on pinnacle-ltg.com are the most recent version and supersede all other previously printed or electronic versions.

Form

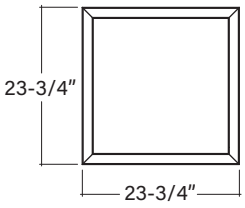

S2 - 2x2 Square

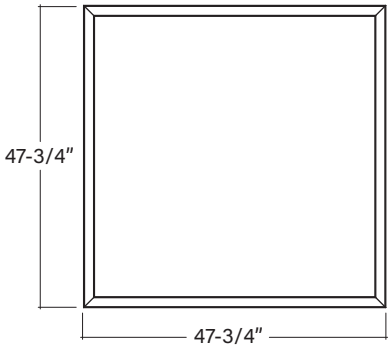

S4 - 4x4 Square

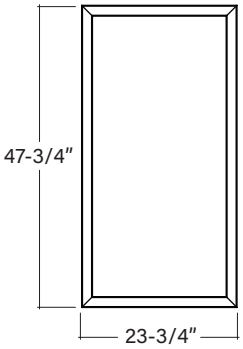

R24 - 2x4 Rectangle

Mounting

- Designed to install into acoustical grid and inaccessible ceilings
- G1, G9, and GS provided with flanged inner rail to support cut ceiling tile (by others), SF mounting will have spackle flange inner and outer rails
- Grid retention brackets integral to housing and require mechanical attachment to grid
- Each housing contains 8 grid retention brackets
- Tie off fixture to structure with retention wires
- Approved for dry/damp location unless otherwise noted

Ceiling Cross Section, G1 Shown

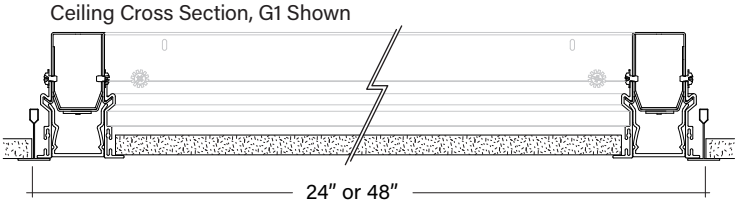

G1	G9	GS	SF
1" (15/16") T-Bar	9/16" T-Bar *For tegular tile installations, fixture position will not be flush to the bottom of the tile*	Screw Slot & 9/16" T-Bar *For 9/16" installations with tegular tile, fixture position will be flush to the bottom of the tile*	Drywall, Spackle Flange Detail

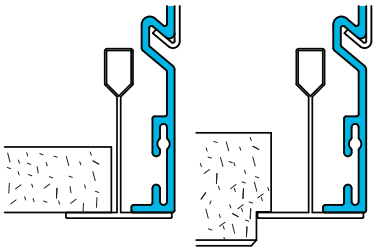

Standard Tile *Tegular Tile*

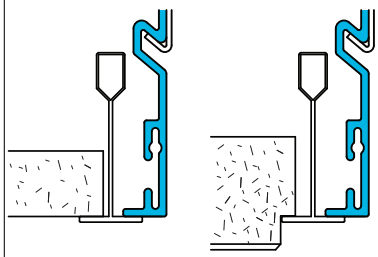

Standard Tile *Tegular Tile*

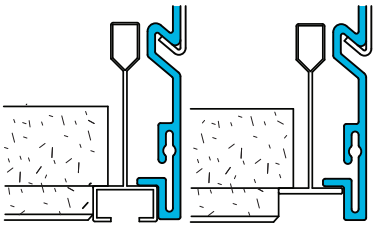

Tegular Tile *Tegular Tile*

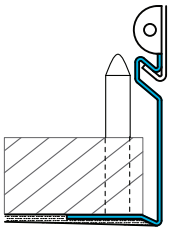

Voltage

- Some EV1DF configurations will not accommodate all voltage options; consult with factory

U	Universal
1	120 volt
2	277 volt
3	347 volt

Specifications and dimensions subject to change without notice. Specification sheets that appear on pinnacle-ltg.com are the most recent version and supersede all other previously printed or electronic versions.

Driver

- Standard Driver Option = FSD
- Driver Lifetime: 50,000 hours at 25°C ambient operating conditions
- For more driver options see Pinnacle Resource Guide
- Some EV1DF configurations will not accommodate all driver options; consult with factory

0-10V Drivers	
FSD	Factory Select Driver 1%, 0-10v
PL2	Advance Xitanium 1%, 0-10v
PL4	Advance Xitanium 347v 1%, 0-10v, requires 347v option
OL2	eldoLED Optotronic, 1%, 0-10v
OL4	eldoLED Optotronic 347v, 1% 0-10v, requires 347v option
EE1	eldoLED ECOdrive 1%, 0-10v, Logarithmic
EE2	eldoLED ECOdrive 1%, 0-10v, Linear
ES1	eldoLED SOLOdrive 0.1%, 0-10v, Logarithmic
ES2	eldoLED SOLOdrive 0.1%, 0-10v, Linear
DALI Drivers	
EE3	eldoLED ECOdrive 1%, DALI 2, Logarithmic, DT6
ES3	eldoLED SOLOdrive 0.1%, DALI 2, Logarithmic, DT6
Lutron Drivers	
LH1	Lutron Hi-lume Soft-on, Fade-to-black 1%, EcoSystem, LDE1

How to specify Circuiting, Battery and Emergency

1

- Select fixture circuiting from options below
- Some EV1DF configurations will not accommodate all circuiting options, consult with factory
- Section wiring not available within an individual Form. Emergency circuit and Night Light circuit options are for designation purposes only.

Circuiting

1	Single Circuit
E	Emergency Circuit only
N	Night Light Circuit only

2 + **3**

- Battery and emergency options are available in addition to fixture circuit
- Select battery and emergency options below; factory shop drawing required
- Some configurations will not accommodate all circuiting options, consult with factory

Battery and/or Emergency *If Required*

0	No battery or specific emergency required

Battery

- Not available in S2 maximum one battery per form
- Battery powers (one) 4ft section within form during the loss of normal power
- 90 minute battery runtime; test button is remote to fixture
- For more battery options see *Pinnacle Resource Guide*

0	No Battery
1FSB	Factory Select Battery 10w, Integral Lithium
1FSBST	Factory Select Battery 10w, Integral Lithium, Self Testing
1PLL	Bodine 10w Integral Lithium, Self Testing
1ILL	Iota 10w Integral Lithium, Self Testing

For Approximate Battery Lumen Output

- Multiply fixture LPW x battery wattage shown on Lumen Table
- 92.3 (LPW) x 10 (watts) = 923 battery lumen output

Emergency

- Not available in S2, maximum one EM device per form
- Emergency device powers entire form during the loss of normal power
- Combine battery and emergency ordering codes if both options are selected

1FSG	Factory Select ALCR, Emergency Control Device, UNV
1GI	Iota ETS-DR, Emergency Control Device, UNV
1GB	Bodine GTD, Emergency Control Device, 120v or 277v

Battery OR Emergency Ordering Examples

- Single circuit, 10w Integral Battery — Ordering Code: 1-1FSB
- Emergency only, 10w Integral Battery — Ordering Code: E-1PLL
- Single circuit, GTD required — Ordering Code: 1-1GB

Specifications and dimensions subject to change without notice. Specification sheets that appear on pinnacle-ltg.com are the most recent version and supersede all other previously printed or electronic versions.

Finish

- Standard powder-coat textured white, metallic silver, textured black, graphite or bronze painted finish; consult factory for chip of standard paint finishes
- Selecting a fixture finish other than white may impact lumen output; consult factory for more information

W	White
S	Metallic Silver
BL	Textured Black
GR	Graphite
BR	Bronze
CC	Custom Color

Fixture Options

CP	Chicago Plenum
FW6	6′ Flex Whip

- Domestic content option - compliance is configuration dependent; consult factory for conformation

BA	Buy America(n) Act and/or Build America Buy America Compliant

Controls

- Pinnacle is able to accommodate different control solutions from different manufacturers. Consult Factory for more information

Photometrics

Satine Lens

Test #	KPL2015-70
Catalog #	EV1DF-A-840HO-4
Lumens	2781
Watts	28.2
Efficacy	99 LPW

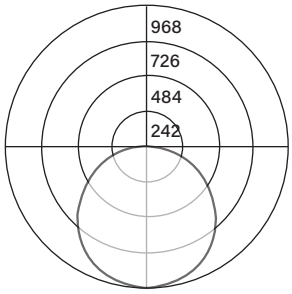

For all available IES files, please visit our website at pinnacle-ltg.com.
Photometry testing in accordance to IESNA-LM-79-08 at an NVLAP or IAS accredited testing laboratory.
Testing conducted at 25°C ambient conditions
NOTE: For accurate light calculations of Chute Forms using lighting design software,
Pinnacle recommends assembling an arrangement from individual
2-foot or 3-foot Leg Edge 1 IES files. Refer to the Chute Forms IES Instructions for more details.

Applications & Certificates

Construction: Welded single piece housing with formed cold-rolled 20 gauge steel and extruded aluminum mounting rails.

Shielding: Diffuse snap-in flush acrylic lens, removable for maintenance.

Mounting: EDGE Recessed Forms are designed to install into acoustical grid and inaccessible ceilings. Consult factory for detailed installation instructions.

LED: 25°C test environment. Lumen output/wattage has a margin of +/- 5%; 2′ or 3′ lengths may have a greater wattage deviation. Luminaire configurations tested in accordance with IES LM-79. Diodes tested in accordance with IES LM-80. Lifetime calculated using IES TM-21. Minimum lifetime greater than 60,000 hours. TM-21-21 Lifetime Rating L70 = >72,000 hours, L90 = 64,700 hours. MacAdam 3-Step Ellipses. For all available IES files, please visit our website at pinnacle-ltg.com.

CRI, CCT & Lumen Output: Not all lumen packages available in every CRI/CCT. Four lumen packages available. Low (LO), Medium (MO), High (HO) and Very High (VHO). Custom outputs are available. Specify custom lumens or watts between standard offering listed on CRI, CCT & Output page. 80 CRI is available for 3000K, 3500K, and 4000K. 90 CRI is available for 2700K, 3000K, 3500K and 4000K. 90 CRI = R9≥50.

Voltage: Universal (U), 120 volt (1), 277 volt (2) and 347 volt (3) options available. Must specify PL4 or OL4 in Driver section when 347 volt (3) is selected. Some EDGE configurations will not accommodate all voltage options; consult with factory.

Driver: Standard Driver Option is Factory Select Driver 0-10V, 1% = FSD. Electronic driver, Power factor is >0.9 with a THD <20%. Driver Lifetime: 50,000 hours at 25°C ambient operating conditions. Ambient operating range: -20°F/-30°C to 103°F/39°C. For more driver options, see Pinnacle Resource Guide. Some EDGE configurations will not accommodate all driver options.

Circuiting: Select from single circuit (1), emergency circuit (E), night light circuit (N). Some EDGE configurations will not accommodate all circuiting options; consult with factory.

Battery & Emergency: Select battery or emergency options if required. If battery or emergency option is not required, enter 0. Battery duration is 90 minutes as standard. Test button is remote to fixture. For more Battery options, see Pinnacle Resource Guide.

Finish: Standard powder-coat textured white, metallic silver, textured black, graphite or bronze painted finish; consult factory for chip of standard paint finishes or for additional custom color and finish options.

Controls: Mod options available, consult with factory.

Buy America Act (BAA) and Build America, Buy America Act (BABA) Compliance: BAA and/or BABA compliance options are available to support federally funded projects requiring domestic content. Availability depends on configuration; Compliance is configuration-dependent; consult factory for confirmation.

Labels: UL and cUL 1598 listed. All lumen packages are IC Rated, approved for dry/damp location unless otherwise noted.

Sustainability: All models are Living Building Challenge (LBC) Declared with third-party verification. The Declare Label from ILFI provides transparent insights into materials, sourcing, and environmental impact, promoting informed, sustainable choices that benefit both people and the planet. View the label here.

Fixture Weight: Maximum fixture weight is 14lbs for 2x2, 21lbs for 2x4, and 28lbs for 4x4.

Warranty: EDGE LED offered with a 5-year limited warranty. Covers LED, driver and fixture.